L6

MIRRORED + CS1 & CS2

BOA®

CONTENTS

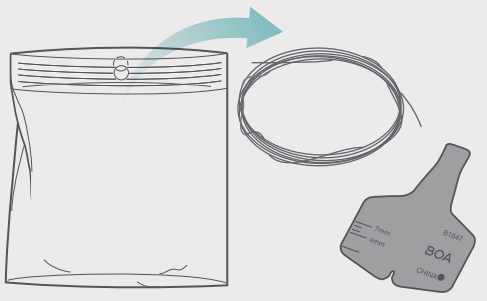

RECOMMENDED: VIEW REPAIR VIDEO
THEBOASYSTEM.COM/REPAIR

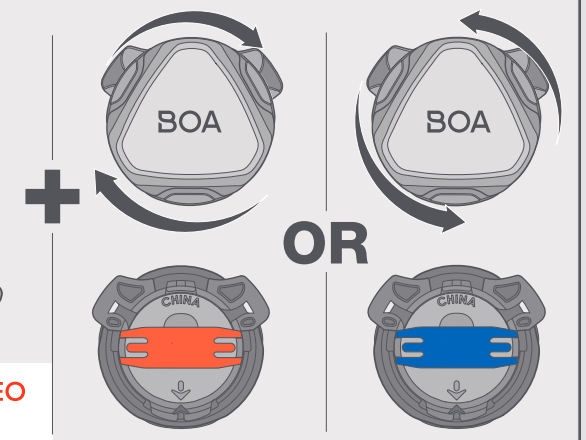

TOOLS NEEDED

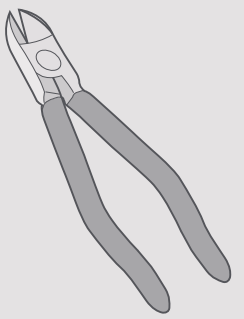

1000046

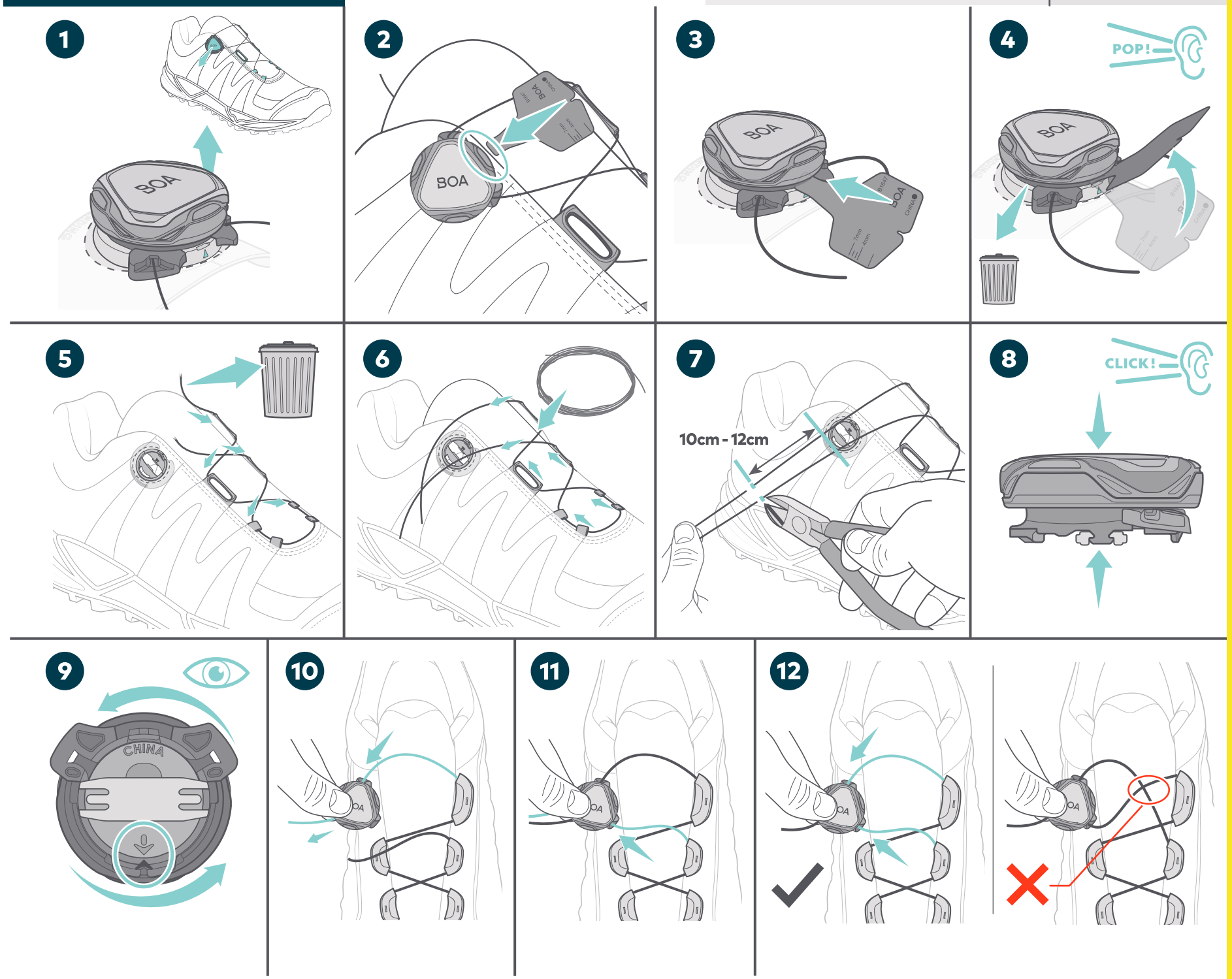

RULER CM

13

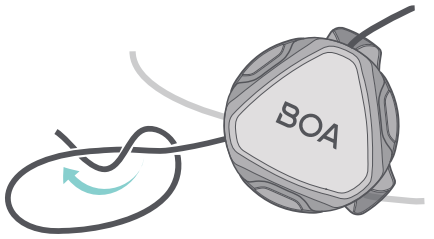

14

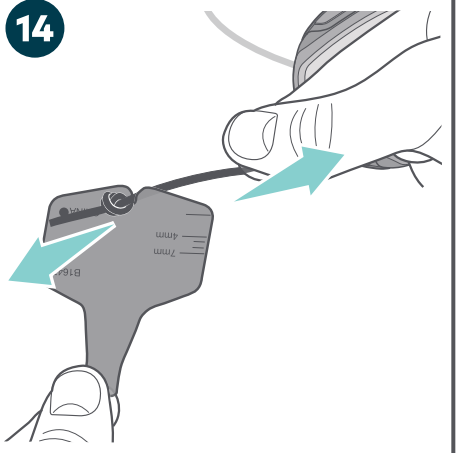

15

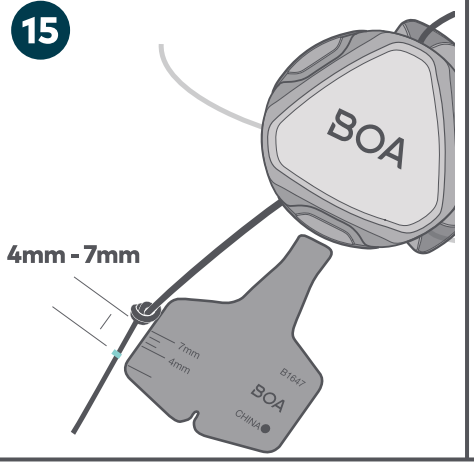

16

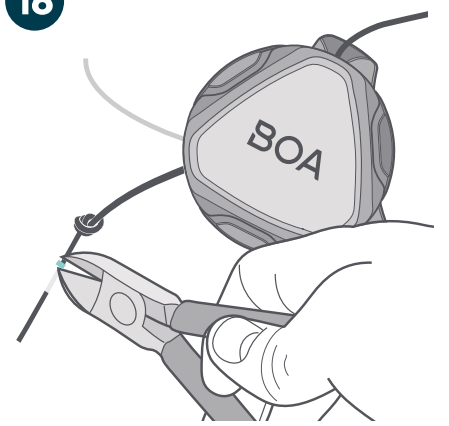

17

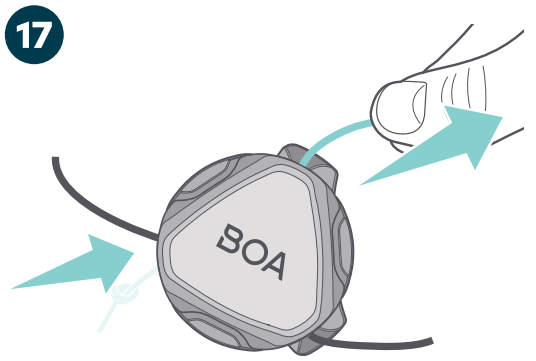

18

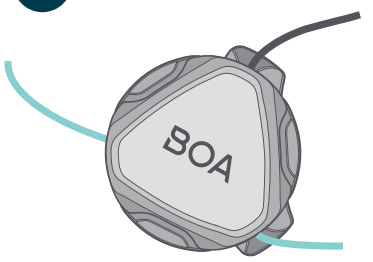

x2

19

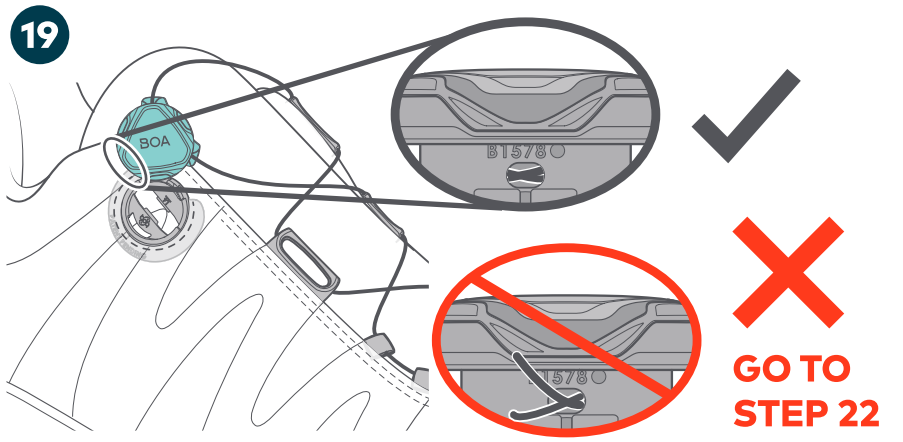

GO TO STEP 22

20

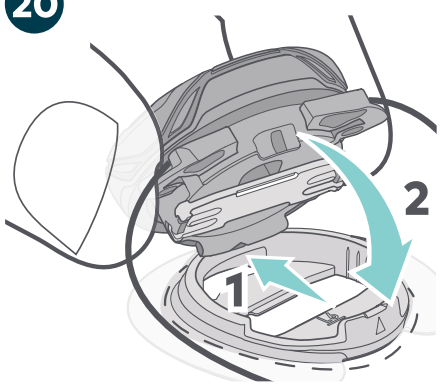

21

22

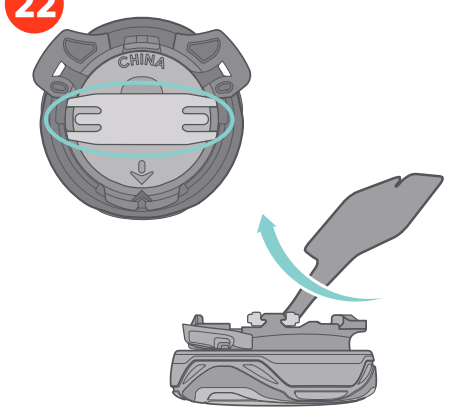

23

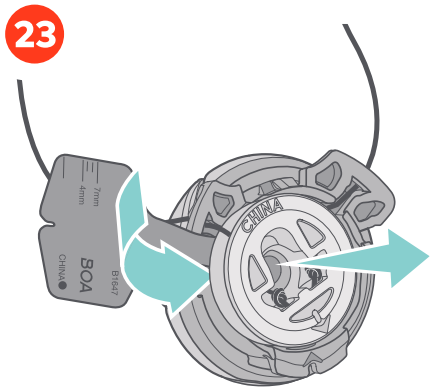

23

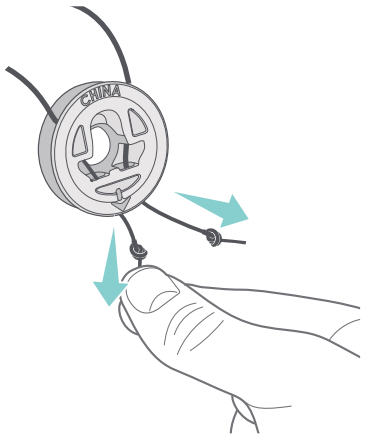

24

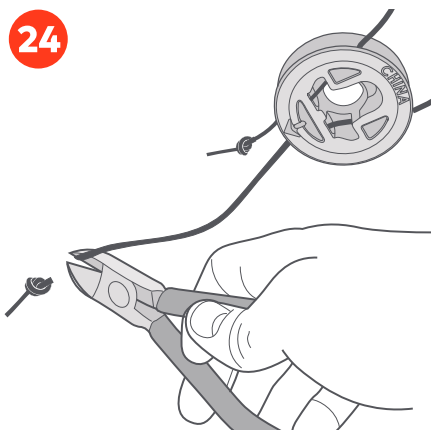

25

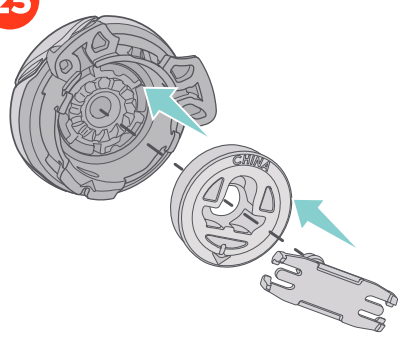

26

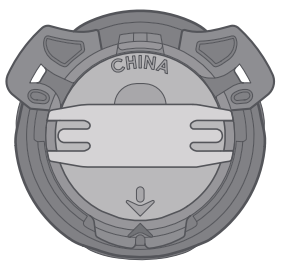

RETURN TO STEP 8